DRAWING NO.
DEMX0010

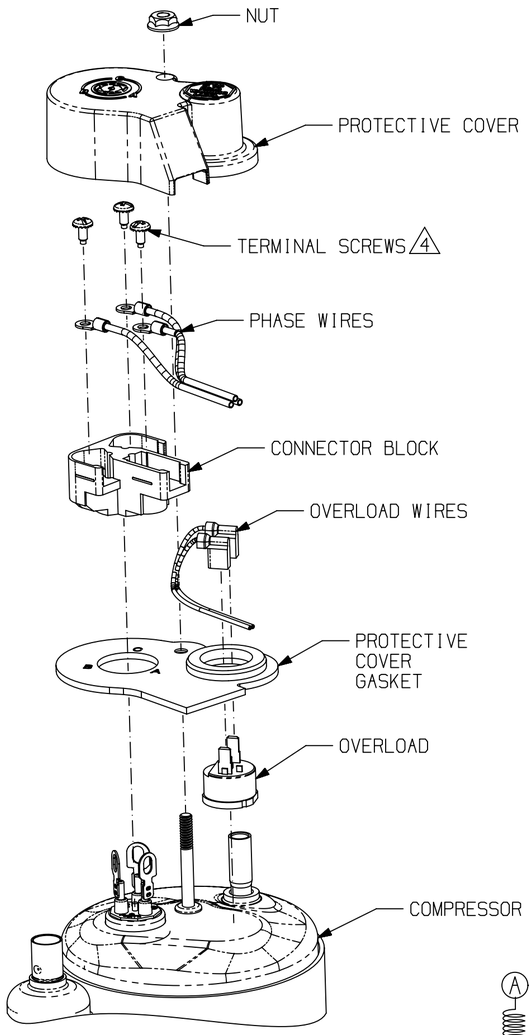

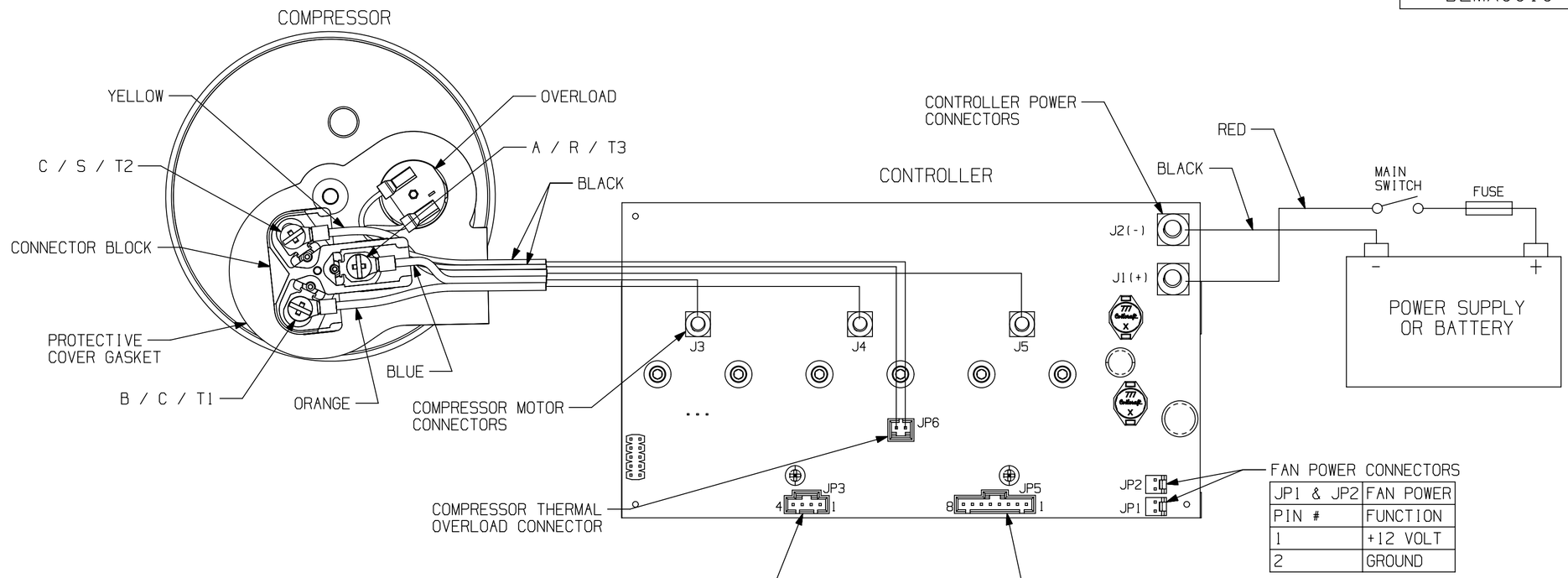

FAN POWER CONNECTORS

JP1 & JP2	FAN POWER
PIN #	FUNCTION
1	+12 VOLT
2	GROUND

SERIAL INTERFACE

JP3	SERIAL INTERFACE
PIN #	FUNCTION
1	Vcc
2	Tx
3	Rx
4	GROUND

CONTROL INTERFACE

JP5	CONTROL INTERFACE
PIN #	FUNCTION
1	NC
2	GROUND
3	POWER ON/OFF INPUT, SWITCHED POWER (CONNECT TO ON/OFF SWITCH)
4	MOTOR POWER (100K IMPEDANCE) (CONNECT TO ON/OFF SWITCH)
5	TACHOMETER, OUTPUT 0-5V PULSE, FREQUENCY INDICATES MOTOR SPEED, RPM = 2.5 * Hz
6	+5V OUTPUT, USED IN CONJUNCTION WITH PIN #7 FOR SPEED CONTROL
7	SPEED CONTROL, INPUT 0-5V
8	FAULT, OUTPUT 0-5V, 0V = NO FAULT, 5V = FAULT

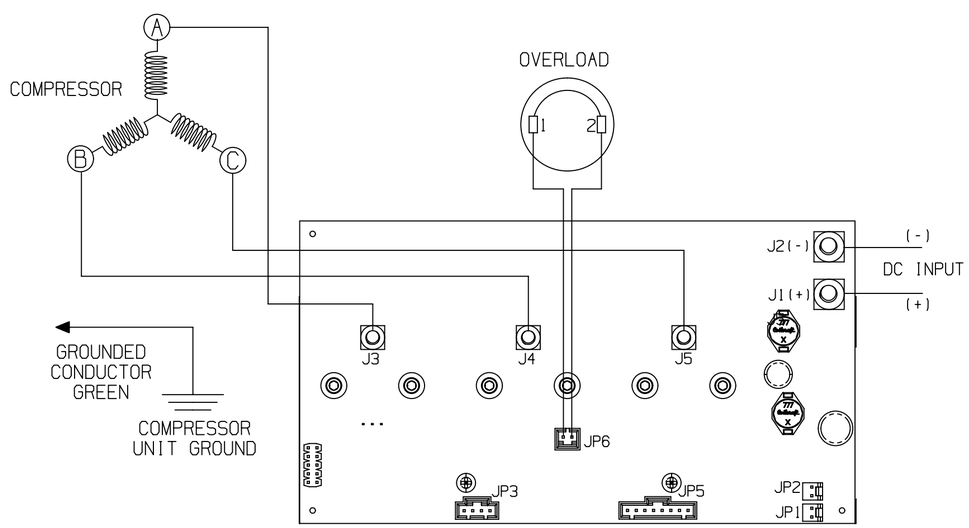

NOTES:

1. ASSEMBLE PARTS AS SHOWN.
2. COMPRESSOR GROUND HOLE LOCATED IN THE MOUNTING FEET OF THE COMPRESSOR.
3. GROUND SCREW IS NOT PROVIDED BY MASTERFLUX.
4. THREADED TERMINAL CONNECTIONS
   - TORQUE #10-32 TERMINAL SCREWS TO 12-18 IN-LBS.
   - TORQUE M5 TERMINALS SCREWS TO 1.5-2.2 N-m
   - TERMINAL SCREWS NOT PROVIDED WITH COMPRESSOR.
5. FOR ALTERNATE WIRING CONFIGURATIONS SEE DEMX0045.

WARNING

WIRING DIAGRAM MUST BE FOLLOWED AS SHOWN. ANY MISWIRING CAN CAUSE SERIOUS ELECTRICAL HAZARD AND POTENTIAL DAMAGE OR RUPTURE OF COMPONENTS ELECTRICAL PARTS.

ENGLISH

Q.A. SYMBOLS
✱ = CATEGORY I
▲ = CATEGORY II
■ = CATEGORY III
= CATEGORY IV

MX

REL	LT	LC	CHANGE	DATE
B	--		EC79528 UPDATED VIEWS	RDS 17JUL20
A	3E		EC29399 VIEW CORRECTED	SP 09MAR10
	--		EC28541	----

THIS DRAWING OR PRINT (I) IS THE PROPERTY OF MASTERFLUX AND CONTAINS INFORMATION BELONGING TO MASTERFLUX. (II) MAY NOT BE REPRODUCED BY THE RECIPIENT ON THE EXPRESS AND SPECIFIC CONDITION THAT NEITHER IT THEREON OR DISCLOSED THEREIN SHALL BE USED FOR THE BENEFIT OF THE RECIPIENT OR OTHERS WITHOUT THE EXPRESS AND SPECIFIC WRITTEN CONSENT OF MASTERFLUX. (III) SHALL NOT BE COPIED OR DUPLICATED IN ANY MANNER OR FORM WHATSOEVER WITHOUT MASTERFLUX'S PRIOR EXPRESS AND SPECIFIC WRITTEN CONSENT. (IV) SHALL BE RETURNED BY THE RECIPIENT THEREOF TO MASTERFLUX AT THE ADDRESS HEREIN WITHIN 30 DAYS AFTER SUCH REQUEST IS MADE.

DIS.CODE

DO NOT SCALE THIS DRAWING ALL FERROUS MATERIALS MUST NOT BE WELDED TO AS RECEIVED OR AT COMPRESSOR ASSEMBLY.

NAME: DRAWING, SALES, CONTROLLER, ELECTRICAL, B-CLASS

DWN.	CK.	APR.	SCALE
SP 29SEP09	ON FILE	ON FILE	1:1 & NOTED

THIS PRINT SUPERSEDES ALL PRINTS PRIOR TO

MASTERFLUX

MATERIAL: NOTED

DRAWING NO. DEMX0010