DRAWING NUMBER	COMPRESSOR MODEL	A	B	C	D	E
DCMX33-001	SIERRAXX-0434XX	5.856-6.256	6.749	5.775-6.175	.377-.384	.430-.500
DCMX33-002	SIERRAXX-0982XX	5.856-6.256	7.730	6.756-7.156	.502-.509	.430-.500

DWG NO. DCMX33 NO

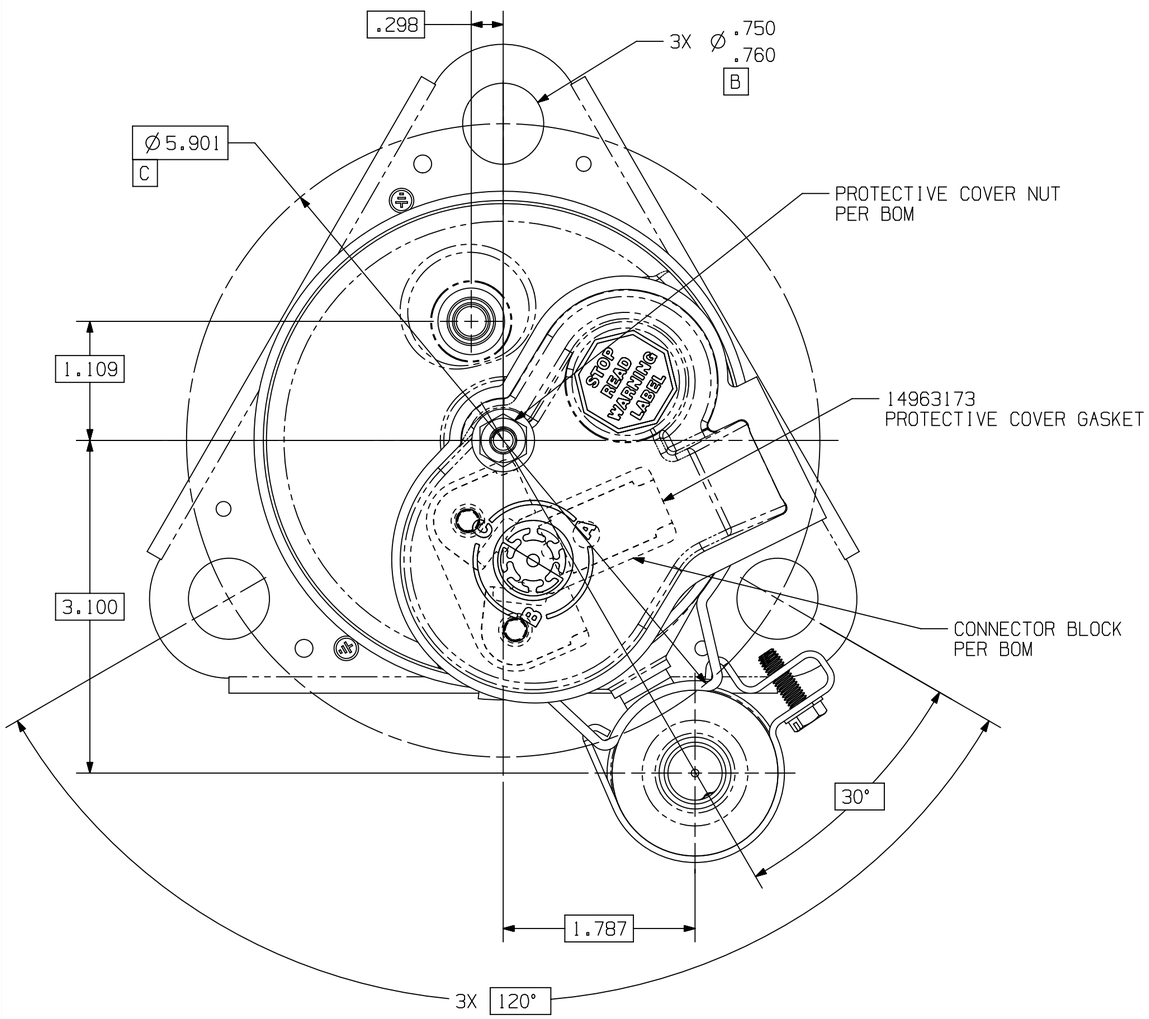

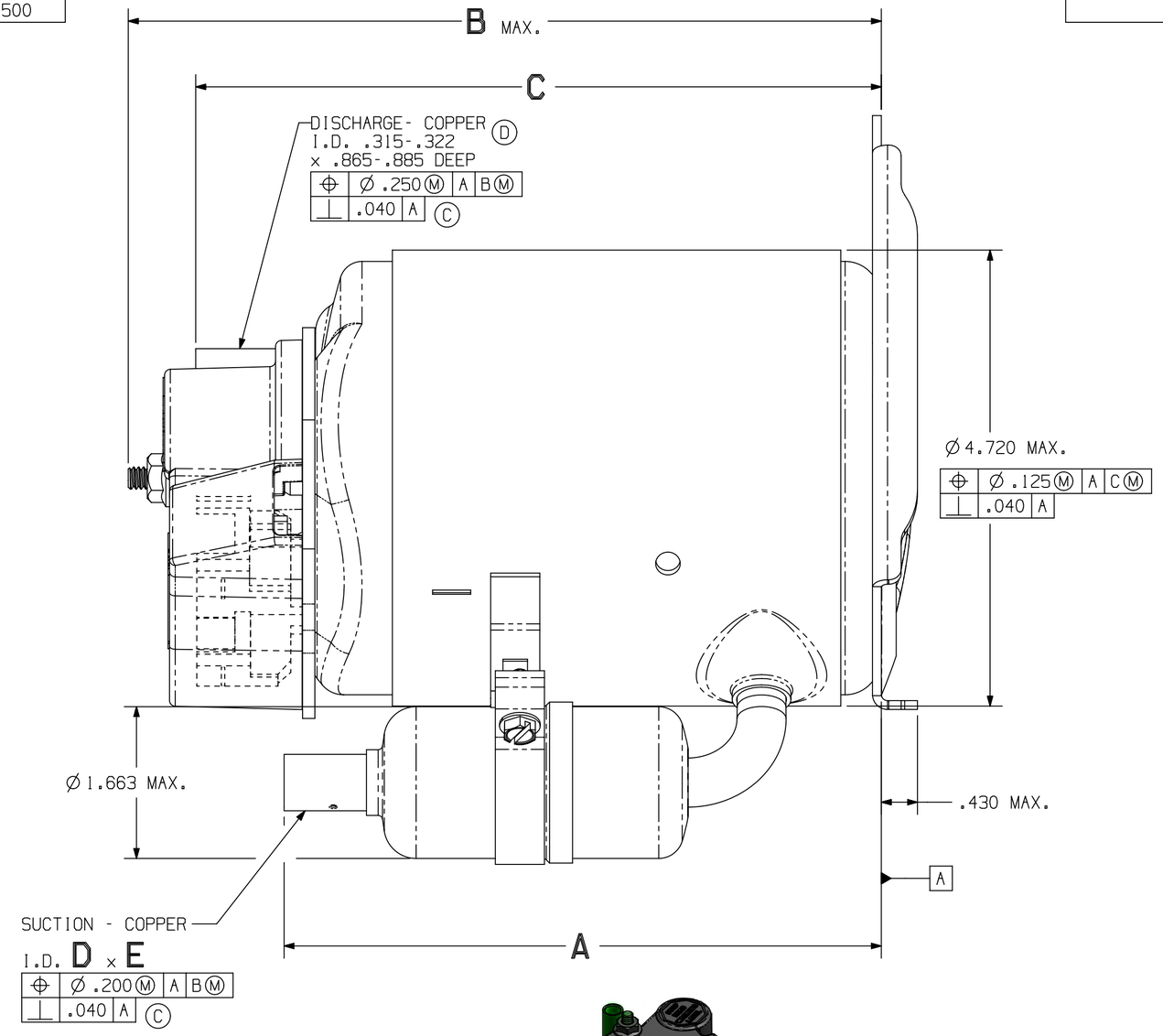

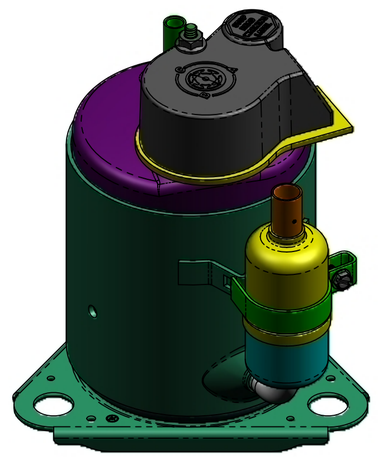

SCALE 1:2

MASTERFLUX - SIERRA

ENGLISH

Q.A. SYMBOLS
- ✱ = CATEGORY I
- ▲ = CATEGORY II
- ■ = CATEGORY III
- = CATEGORY IV

NOTES:

1. PROTECTIVE COVER, PROTECTIVE COVER GASKET AND PROTECTIVE COVER NUT ASSEMBLED IF CALLED FOR ON BILL OF MATERIAL.
2. TERMINAL COVER MOUNTING STUD THREADS MUST BE FREE OF PAINT.
3. TORQUE TERMINAL COVER NUT TO 15-20 IN-LBS.
▲4. MUST COMPLY WITH T.C.Co. GLOBAL SPEC 08.

LT	LC	CHANGE	DATE
D	3E 1A 1F	EC100635 CORRECTED CALLOUT, CORRECTED DRAWING #	RDS 06APR21
C	3E	EC92471 ATP DISCHARGE NOTE MODIFIED	BD 04OCT19
	5C	SUCTION NOTE MMODIFIED	
B	--	EC70089 ADDED DCMX33-001	RDS 02FEB16
A	--	EC65329 ADDED NOTE #3	RDS 02NOV15
REL		EC63137	----

THIS DRAWING OR PRINT (I) IS THE PROPERTY OF TECUMSEH PRODUCTS COMPANY (TECUMSEH) AND CONTAINS PROPRIETARY AND CONFIDENTIAL INFORMATION BELONGING TO TECUMSEH. (II) IS MADE AVAILABLE TO THE RECIPIENT ON THE EXPRESS AND SPECIFIC CONDITION THAT NEITHER IT NOR THE INFORMATION CONTAINED THEREON OR DISCLOSED THEREIN SHALL BE DISCLOSED OR MADE AVAILABLE TO OTHERS WITHOUT THE EXPRESS AND SPECIFIC WRITTEN CONSENT OF TECUMSEH AND THAT SUCH INFORMATION ONLY AS EXPRESSLY AND SPECIFICALLY APPROVED IN WRITING BY TECUMSEH AND NO OTHERWISE. (III) SHALL NOT BE COPIED OR DUPLICATED IN ANY MANNER OR TO ANY EXTENT WITHOUT TECUMSEH'S PRIOR EXPRESS AND SPECIFIC WRITTEN CONSENT AND (IV) SHALL BE RETURNED BY THE RECIPIENT THEREOF TO TECUMSEH AT THE LATTER'S REQUEST PROMPTLY AFTER SUCH REQUEST IS MADE.

DO NOT SCALE THIS DRAWING. ALL FERROUS MATERIALS MUST NOT BE MAGNETIZED AS RECEIVED OR AT COMPRESSOR ASSEMBLY.

DIS.CODE

DESCRIPTION: SALES COMPRESSOR

DWN.	CK.	APR.	SCALE
RDS 16JAN15	ON FILE	ON FILE	1:1 & NOTED

THIS PRINT SUPERSEDES ALL PRINTS PRIOR TO

MASTERFLUX

MATERIAL: NOTED

DWG NO. DCMX33 NO