DRAWING NUMBER	COMPRESSOR MODEL
DCMX44	MESAXX-0085YX

DWG NO.
DCMX44

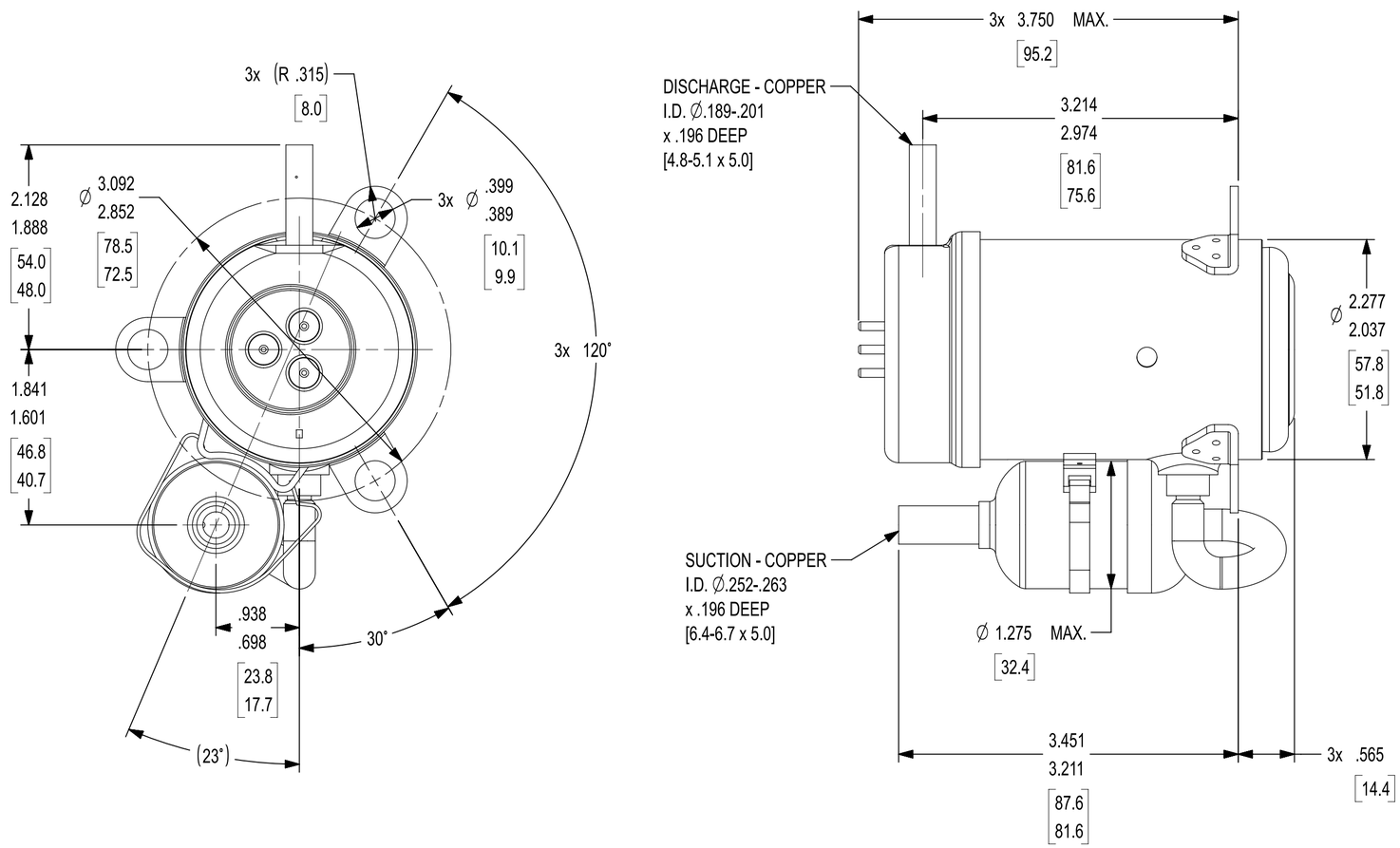

ENGLISH

Q.A. SYMBOLS
- ✱ = CATEGORY I
- ▲ = CATEGORY II
- ■ = CATEGORY III
- = CATEGORY IV

MX - MESA

REL	LT	LC	CHANGE	DATE
			EC80636	----

THIS DRAWING OR PRINT (I) IS THE PROPERTY OF TECUMSEH PRODUCTS COMPANY (TECUMSEH) AND CONTAINS PROPRIETARY AND CONFIDENTIAL INFORMATION BELONGING TO TECUMSEH. (II) IS MADE AVAILABLE TO THE RECIPIENT ON THE EXPRESS AND SPECIFIC CONDITION THAT NEITHER IT NOR THE INFORMATION CONTAINED THEREON OR DISCLOSED THEREIN SHALL BE DISCLOSED OR MADE AVAILABLE TO OTHERS WITHOUT THE EXPRESS AND SPECIFIC WRITTEN CONSENT OF TECUMSEH AND THAT SUCH INFORMATION ONLY AS EXPRESSLY AND SPECIFICALLY APPROVED IN WRITING BY TECUMSEH AND NOT OTHERWISE. (III) SHALL NOT BE COPIED OR DUPLICATED IN ANY MANNER OR TO ANY EXTENT WITHOUT TECUMSEH'S PRIOR EXPRESS AND SPECIFIC WRITTEN CONSENT AND (IV) SHALL BE RETURNED BY THE RECIPIENT THEREOF TO TECUMSEH AT THE LATTER'S REQUEST PROMPTLY AFTER SUCH REQUEST IS MADE.

DO NOT SCALE THIS DRAWING. ALL FERROUS MATERIALS MUST NOT BE MAGNETIZED AS RECEIVED OR AT COMPRESSOR ASSEMBLY.

DIS.CODE

DESCRIPTION
SALES COMPRESSOR

DWN.	CK.	APR.	SCALE
RDS 26SEP17	ON FILE	ON FILE	1=1 & NOTED

THIS PRINT SUPERSEDES ALL PRINTS PRIOR TO

MASTERFLUX

MATERIAL
NOTED

DWG NO.
DCMX44